FLOW METER:	N/A
CONNECTION:	8" DIA. C.I./PVC PIPE
ACCESSORIES:	NONE

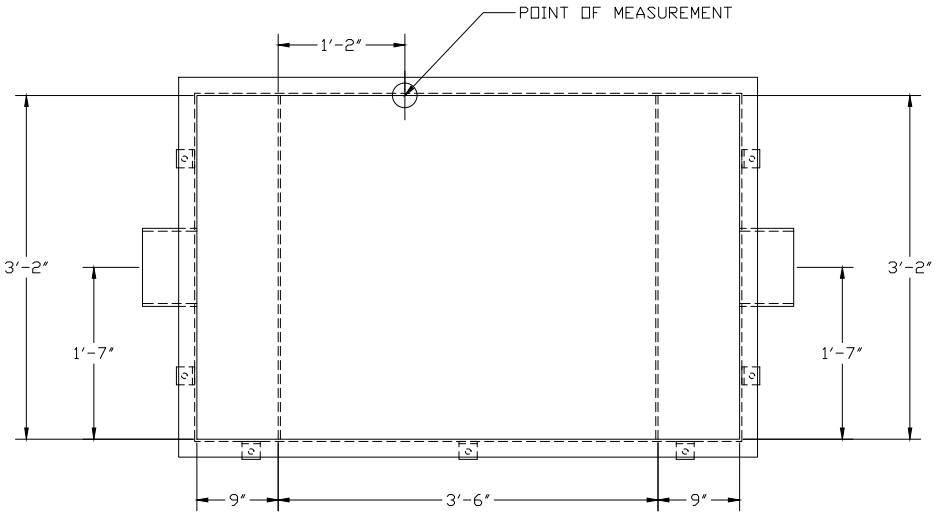

PLAN VIEW

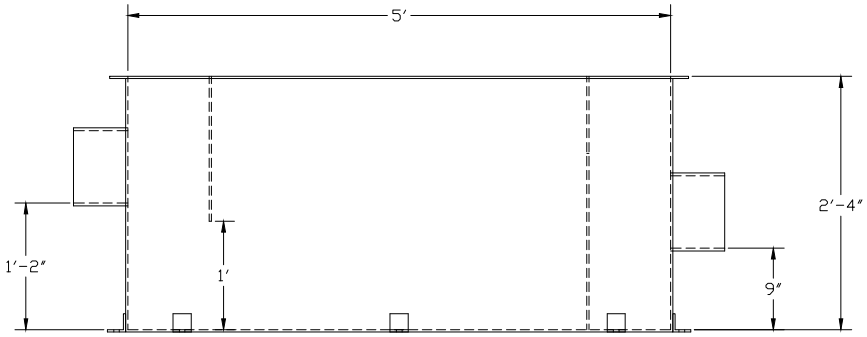

RIGHT ELEVATION VIEW

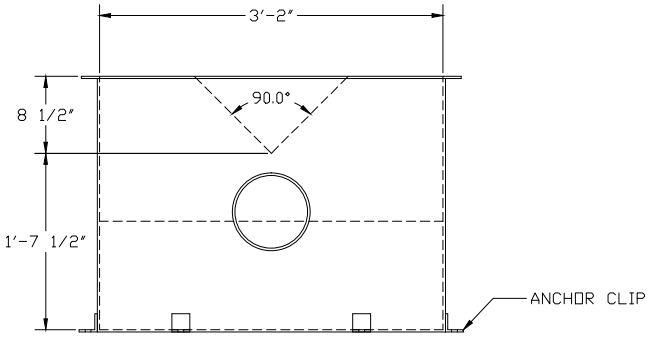

DISCHARGE ELEVATION VIEW

1) FLOW IS FROM LEFT TO RIGHT
2) SIZED PER ISO 1438/1-1990
3) OPEN CHANNEL CONDITIONS MUST BE PRESENT
4) FIXED 90° V-NOTCH WEIR AND BAFFLE PLATES
5) SIDE STIFFENING RIBS NOT SHOWN FOR CLARITY

TRACOM
FIBERGLASS PRODUCTS

LARGE WEIR BOX, 38" W X 60" L X 28" H, WITH FIXED 90° V-NOTCH WEIR PLATE, FIXED BAFFLE PLATE, AND 8" PIPE STUBS

DWG. NO.	WB-LRG-90V-B-P8-N-N-N-N	REV 0
PROJECT	STANDARD WEIR BOX	DATE 10/24/12